California Polytechnic State University Pomona
DEPARTMENT OF ELECTRICAL & COMPUTER ENGINEERING

Circuit Analysis 2 Laboratory

ECE 2101L-03
Report #11

LAB 11 – Parallel Resonance Circuits

Prepared by
Kevyn Santos & Kaung Nyi Naing

Presented to
Sasoun Torousian

April 18, 2024

Introduction:

In this lab, we will be examining how voltage reacts in a parallel resonant circuit. More specifically we will examine how we establish the resonance frequency and the quality factor, Q, in relation to the resistor, inductor, and capacitor values. At some frequency, the capacitor and inductor reactances will cancel each other out and this is our resonance frequency. Here is where you will find the maximum voltage. We find the quality factor through $Q = \frac{R}{X} = \frac{fr}{BW}$. The circuit is inductive when below resonance frequency and capacitive above resonance frequency.

Components:

(1) 10 nF (1) 10 mH (1) 2.2 kΩ (1) 10 kΩ (1) 100 kΩ

Lab:

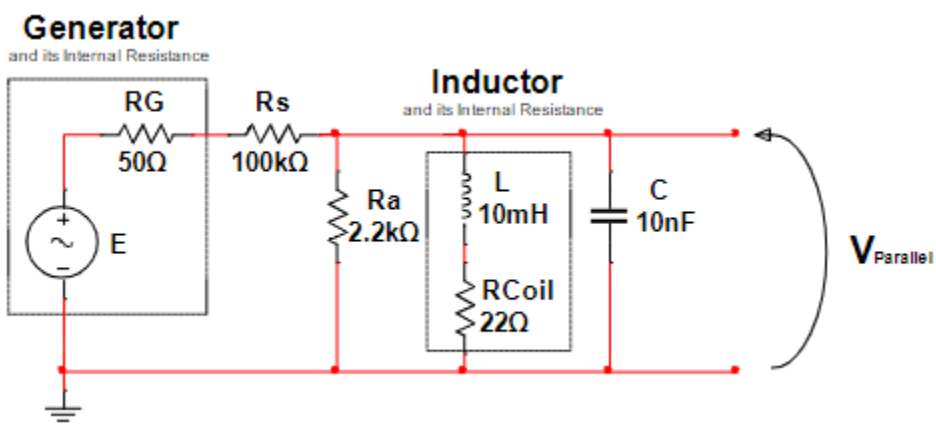

Figure 1: Lab Schematic Low Q Circuit

$$Rcoil_p = \frac{R_{coil}^2 + X_L^2}{R_{coil}} \qquad X_{Lp} = \frac{R_{coil}^2 + X_L^2}{X_L}$$

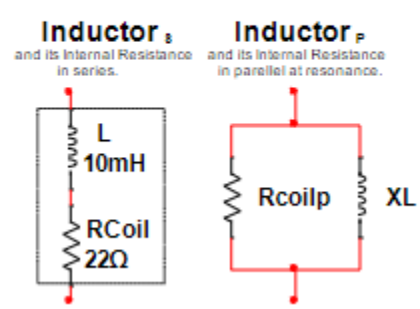

Figure 2: Series to Parallel Conversion of Inductor Resistance

Calculations

Both Circuits: R_S = 100 kΩ, C = 10 nF, L = 10 mH, R_{coil} = 22Ω ,E = 10 $V_{p\text{-}p}$

f_r =	$\frac{1}{2\pi\sqrt{LC}} = \frac{1}{2\pi\sqrt{10m * 10n}} =$ 15915.49 Hz
X_C =	$\frac{1}{2\pi fC} = \frac{1}{2\pi*15915*10n} =$ 1000 Ohms
X_L =	$2\pi*f*L$ = 2π*15915*10m = 1000 Ohms
$Rcoil_p$ =	$\frac{R_{coil}^2+X_L^2}{R_{coil}} = \frac{22^2+1000^2}{22} =$ 45476.54 Ohms
X_{Lp} =	$\frac{R_{coil}^2+X_L^2}{X_L} = \frac{22^2+1000^2}{1000} =$ 1000.484 Ohms

Low Q Circuit: R_a = 2.2 kΩ

R_T =	$Rcoil_p \parallel R_a$ = 2098.48 Ohms
Q =	$\frac{R_T}{X_L}$ = 2.0985
BW =	$\frac{fr}{Q} = \frac{15915}{2.0985} =$ 7584.29 Hz
f_1 =	$fr - \frac{BW}{2}$ = 12123.35 Hz
f_2 =	$fr + \frac{BW}{2}$ = 19707.64 Hz

High Q Circuit: R_a = 10 kΩ

R_T =	$Rcoil_p \parallel R_a$ = 8197.44 Ohms
Q =	$\frac{R_T}{X_L}$ = 8.1974
BW =	$\frac{fr}{Q} = \frac{15915}{8.1974} =$1941.52 Hz
f_1 =	$fr - \frac{BW}{2}$ = 14944.73 Hz

$f_2 =$	$fr + \frac{BW}{2} = 16886.25$ Hz

Data Tables

Low Q Circuit:

	Theory	Experimental	% Deviation
f_r	15915.49	16934.56	-6.403
Q	1.9443	1.7976	7.545
f_1	11822.58	12855.12	-8.734
f_2	20008.40	22275.34	-11.330

Table 1

Frequency	$V_{Parallel}$ (V)
f_r =16934.56	0.171
f_1 =12855.12	0.1209
f_2 =22275.34	0.1209
1 kHz	0.0082
5 kHz	0.0315
8 kHz	0.0552
12 kHz	0.1053
20 kHz	0.1454
30 kHz	0.0707
50 kHz	0.0358
100 kHz	0.0175

Table 2

High Q Circuit:

	Theory	Experimental	% Deviation
f_r	15915.49	16694.85	-4.897
Q	6.2584	5.7738	7.743
f_1	14643.97	15032.77	-2.655
f_2	17187.02	17924.23	-4.289

Table 3

Frequency	$V_{Parallel}$ (V)
f_r =16694.85	0.440
f_1 =15032.77	0.311
f_2 =17924.23	0.311
1 kHz	0.0084
5 kHz	0.0325
8 kHz	0.0595
12 kHz	0.1349
20 kHz	0.2261
30 kHz	0.0766
50 kHz	0.0379
100 kHz	0.0212

Table 4

Simulation

Low Q Circuit:

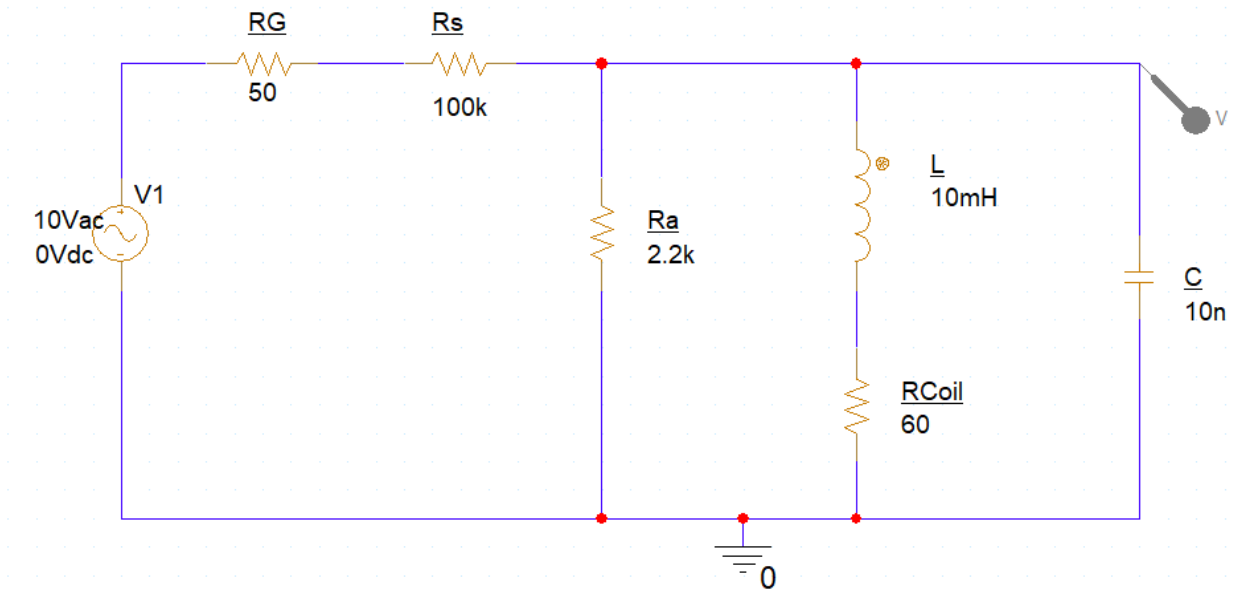

Figure 3: Low Q Circuit with Ra = 2.2k Ohms

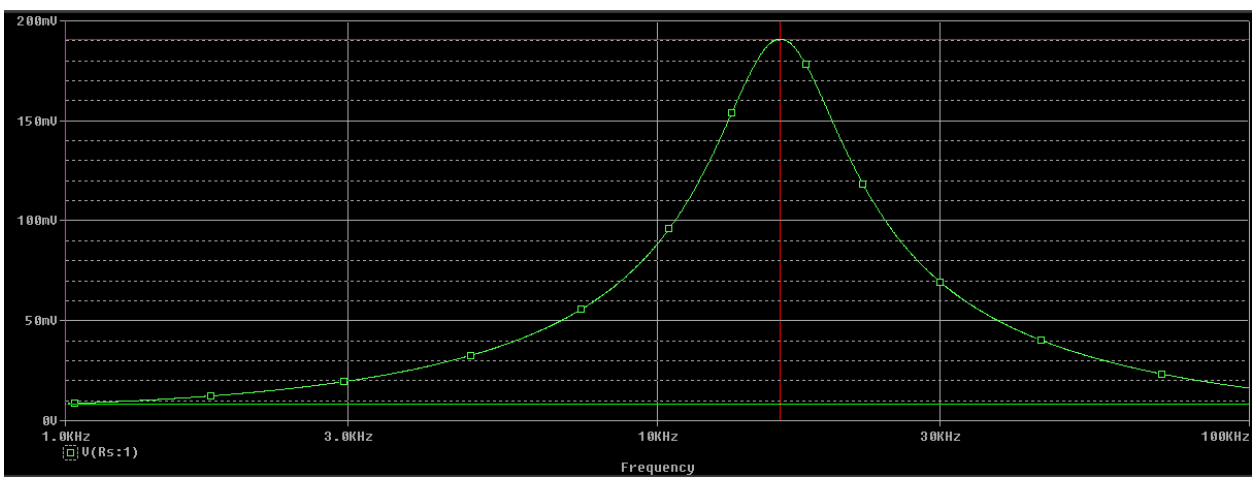

Figure 4: AC Sweep Voltage Curve Showing Max (red) and Min (green)

	Trace Color	Trace Name	Y1	Y2	Y1 - Y2		Y1(Cursor1) - Y2(Cursor2)		182.404m		
		X Values	16.144K	1.0000K	15.144K		Y1 - Y1(Cursor1)	Y2 - Y2(Cursor2)	Max Y	Min Y	Avg Y
	CURSOR 1,2	V(Rs:1)	190.881m	8.4762m	182.404m		0.000	0.000	190.881m	8.4762m	99.678m

Figure 5: Cursor Results Showing Max (Y1) and Min (Y2)

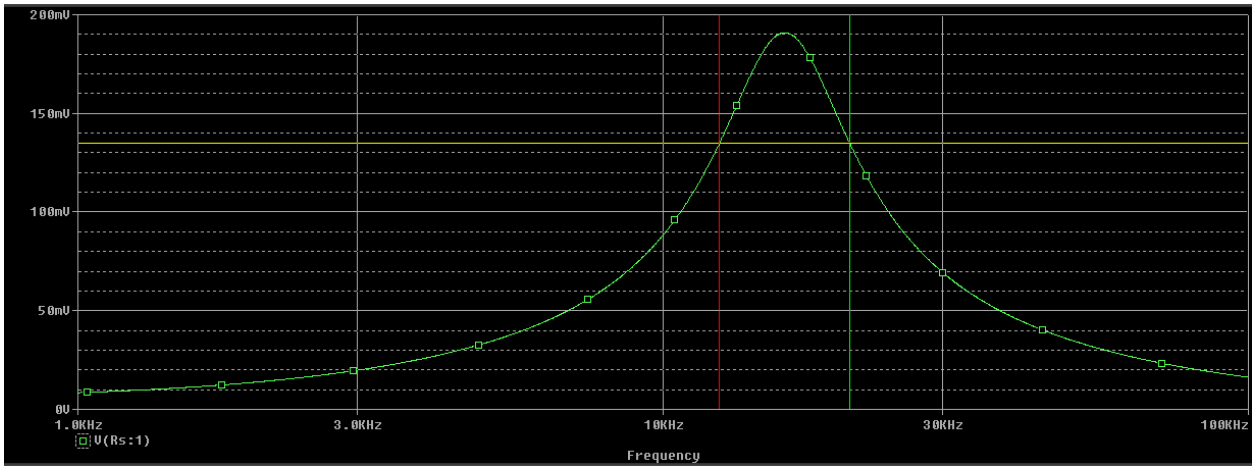

Figure 6: AC Sweep Voltage Curve Showing f1 (red) and f2 (green)

	Trace Color	Trace Name	Y1	Y2	Y1 - Y2		Y1(Cursor1) - Y2(Cursor2)		0.000		
		X Values	12.485K	20.836K	-8.3510K		Y1 - Y1(Cursor1)	Y2 - Y2(Cursor2)	Max Y	Min Y	Avg Y
	CURSOR 1,2	V(Rs:1)	134.952m	134.952m	0.000		0.000	0.000	134.952m	134.952m	134.952m

Figure 7: Cursor Results Showing f1 (Y1) and f2 (Y2)

High Q Circuit:

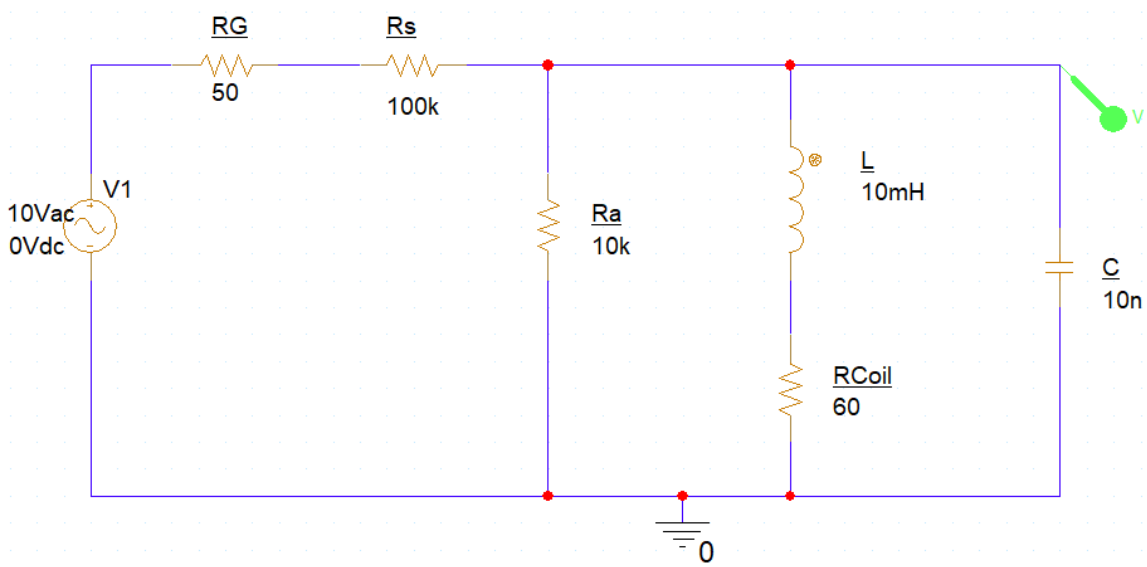

Figure 8: High Q Circuit with Ra = 10k Ohms

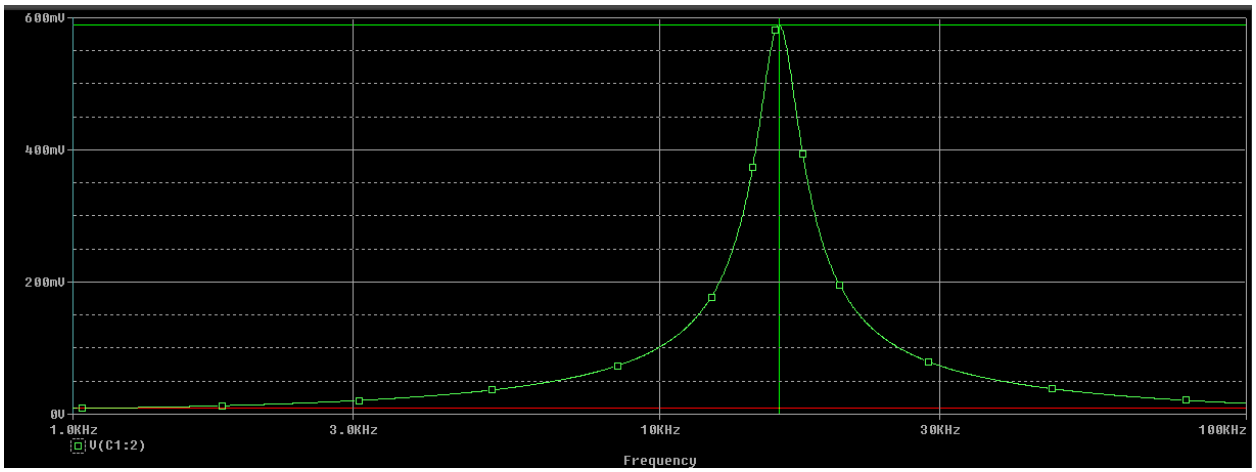

Figure 9: AC Sweep Voltage Curve Showing Max (green) and Min (red)

	Trace Color	Trace Name	Y1	Y2	Y1 - Y2		Y1(Cursor1) - Y2(Cursor2)		-580.337m		
		X Values	1.0000K	15.959K	-14.959K		Y1 - Y1(Cursor1)	Y2 - Y2(Cursor2)	Max Y	Min Y	Avg Y
	CURSOR 1,2	V(C1:2)	8.6600m	588.997m	-580.337m		0.000	0.000	588.997m	8.6600m	298.828m

Figure 10: Cursor Results Showing Max (Y2) and Min (Y1)

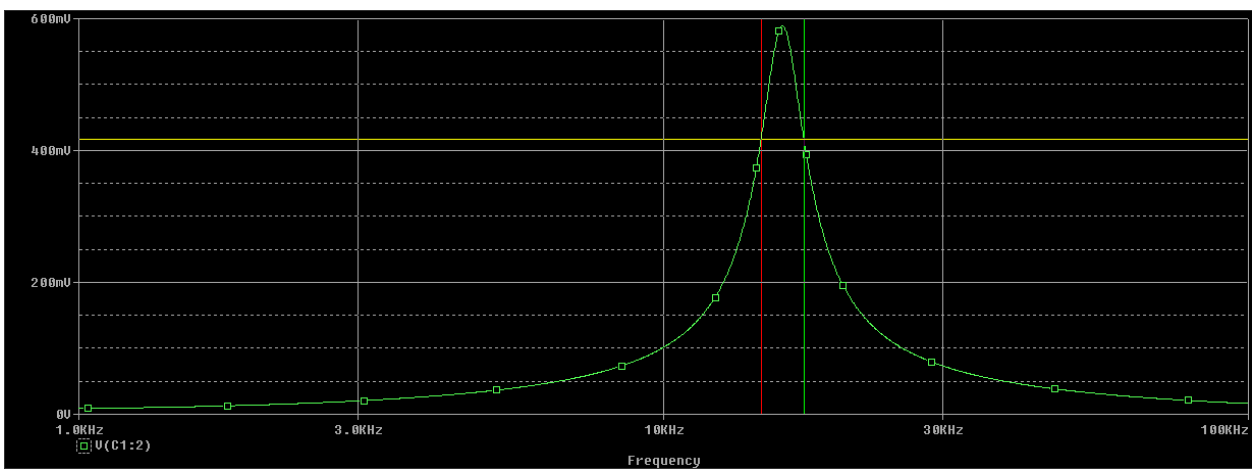

Figure 11: AC Sweep Voltage Curve Showing f1 (red) and f2 (green)

	Trace Color	Trace Name	Y1	Y2	Y1 - Y2		Y1(Cursor1) - Y2(Cursor2)		0.000		
		X Values	14.671K	17.378K	-2.7065K		Y1 - Y1(Cursor1)	Y2 - Y2(Cursor2)	Max Y	Min Y	Avg Y
	CURSOR 1,2	V(C1:2)	416.421m	416.421m	0.000		0.000	0.000	416.421m	416.421m	416.421m

Figure 12: Cursor Results Showing f1 (Y1) and f2 (Y2)

PCB Design:

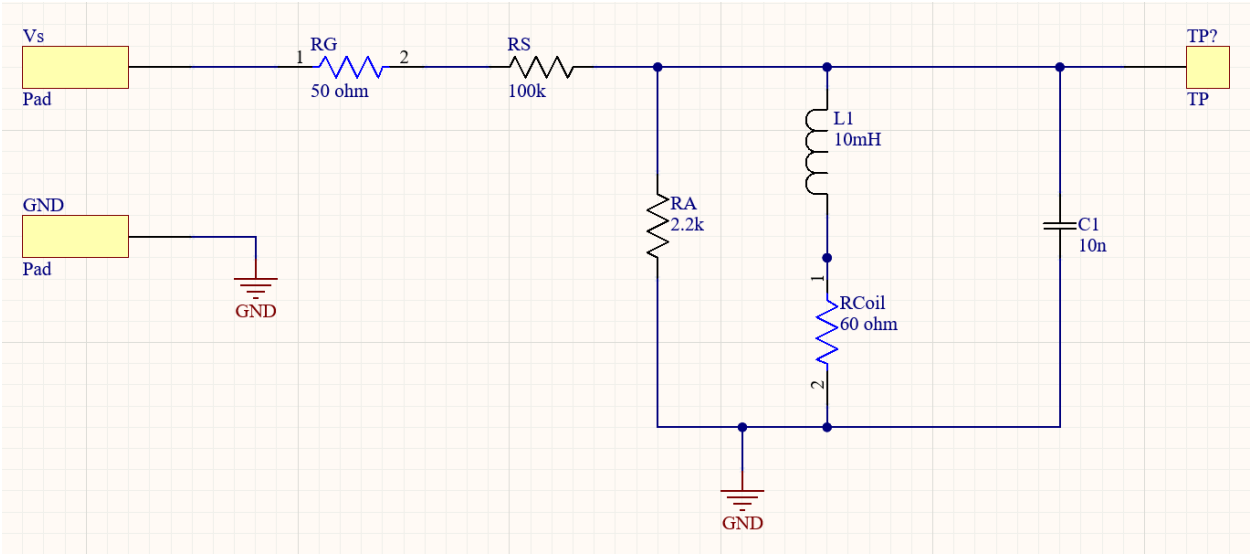

Figure 13: PCB Schematic of Low Q Circuit

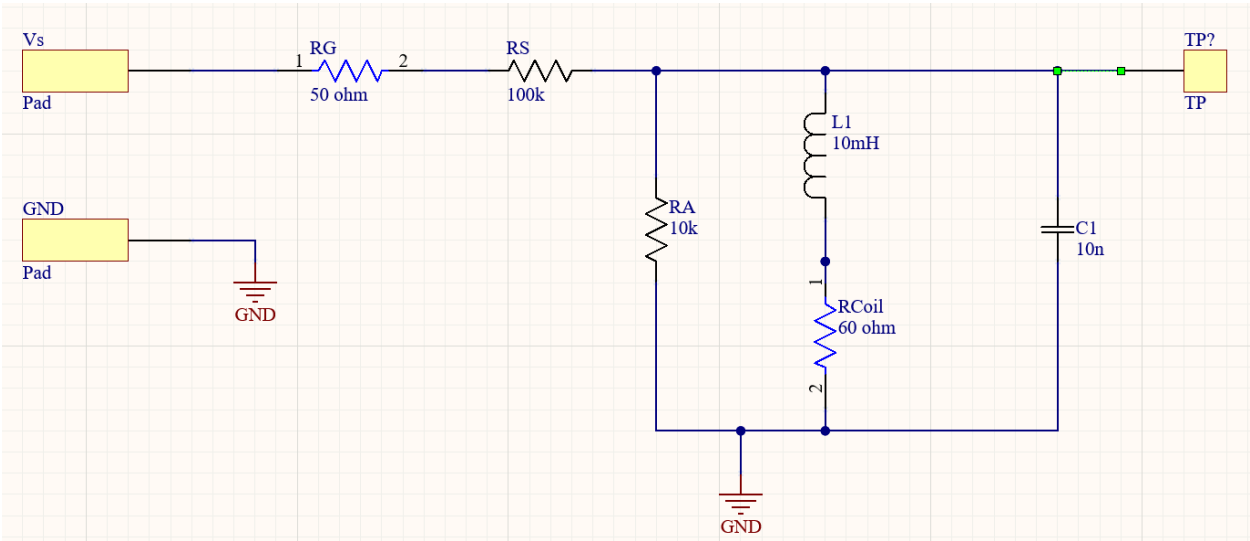

Figure 14: PCB Schematic of High Q Circuit

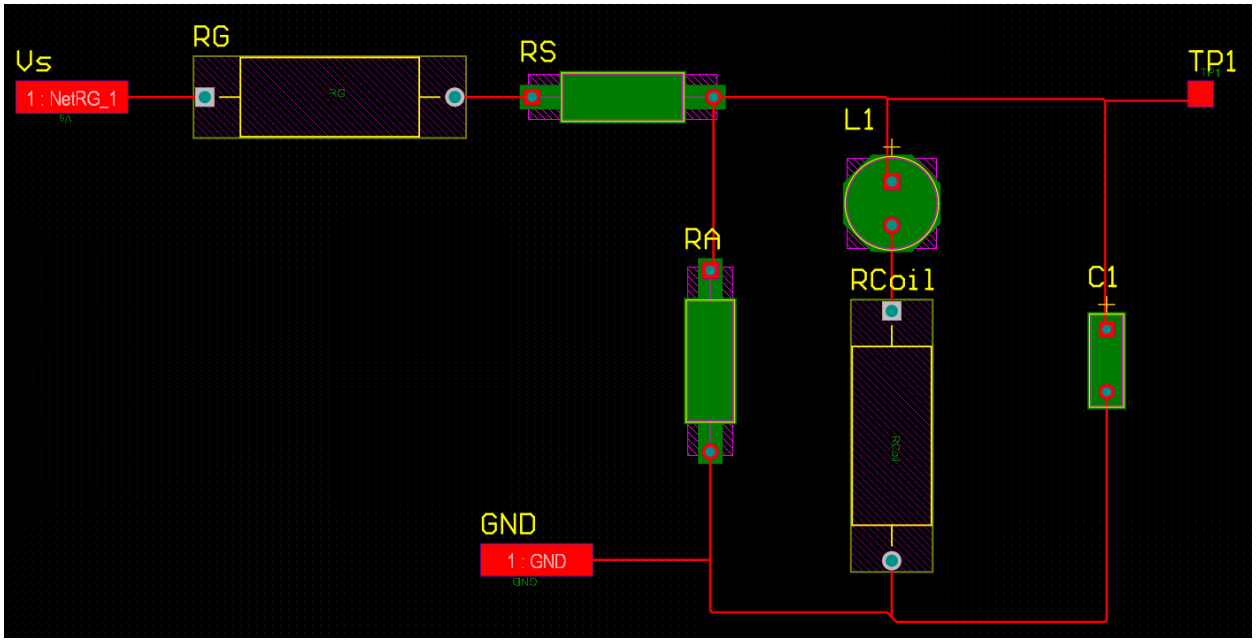

Figure 15: PCB Design of both Low Q and High Q Circuit

Conclusion:

To start off this lab we got our theoretical resonance, and other theoretical values to help us compare our measured values. We made sure to convert our inductor's resistance to the total resistance. We then built the circuit, placed our probe across the parallel branch, and adjusted the frequency to find our measured resonance frequency. This was found when we reached maximum voltage. We swept the frequency till we found our measured f1 and f2 values. With the measured values we got our experimental Q. Lastly, we ran our circuit at frequencies ranging from 1kHz to 100kHz and recorded how the voltage changed. We repeated all these steps for our High Q circuit, where Ra = 10k instead of 2.2k. This lab was extremely informative and helped us understand how the parallel voltage changes with respect to the frequency change. In conclusion, this lab was very successful with our deviations being minimal.

Post Lab:

1- Design a parallel resonant RLC circuit with w0 = 10 rad/s and Q = 20 Calculate the bandwidth of the circuit. Let R=10 ohm

$$fr = \frac{w0}{2\pi} = 1.5915 \text{ Hz}$$

$$LC = \left(\frac{1}{w0}\right)^2 = 0.01$$

$$BW = \frac{fr}{Q} = 0.079575 \text{ Hz}$$

$$XL = \frac{R}{Q} = 0.5 \text{ Ohms}$$

$$L = \frac{XL}{2*\pi*f} = 0.05\text{H}$$

$$C = \frac{LC}{L} = 0.2 \text{ F}$$

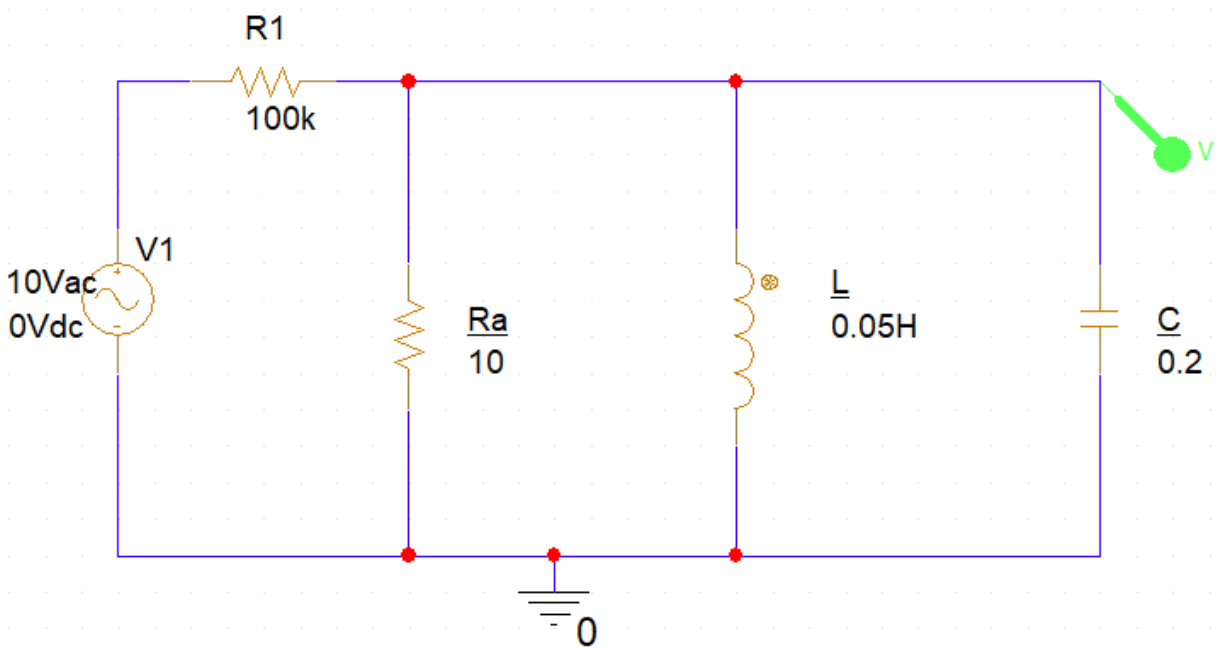

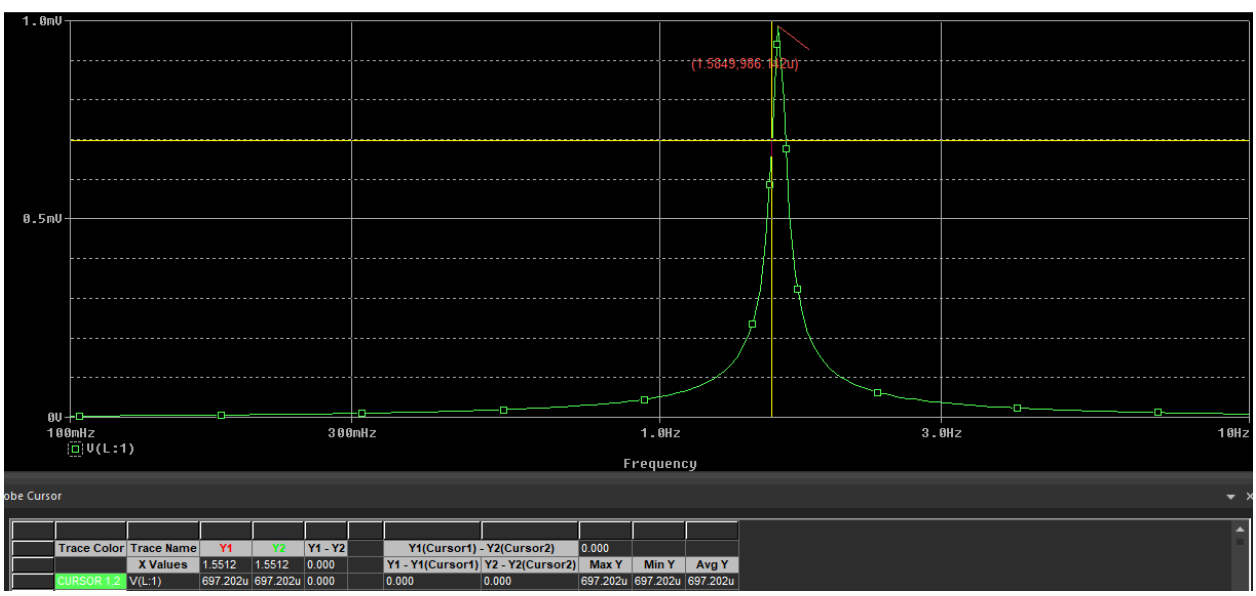

2- A parallel RLC circuit has R = 5kΩ, L = 8mH, and C = 60μF. Determine:

(a) The resonant frequency

$$fr = \frac{1}{2\pi\sqrt{LC}} = \frac{1}{2\pi\sqrt{8m * 60\mu}} = 229.72Hz$$

(b) The bandwidth

$$BW = \frac{fr}{Q} = \frac{229.72Hz}{432.9} = 0.531 \text{ Hz}$$

(c) The quality factor

$$Xl = 2\pi * f * L = 2\pi * 229.72 * 8m = 11.55 \text{ ohm}$$

$$Q = \frac{R_T}{X_L} = \frac{5000}{11.55} = 432.9$$